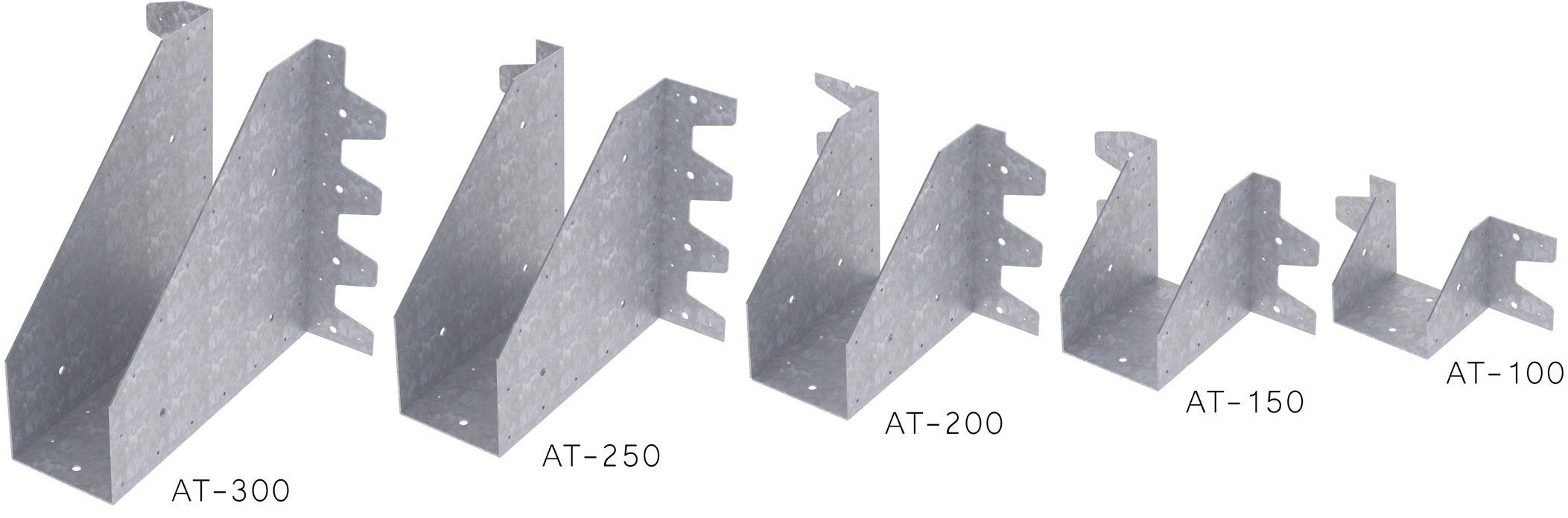
AT-300
AT-250
AT-200
AT-150
AT-100